SHBG01L

HARVIA BLOCK-SAUNA GLASSES.
Thickness of the glass 8mm, tempered, CLEAR.

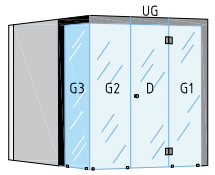

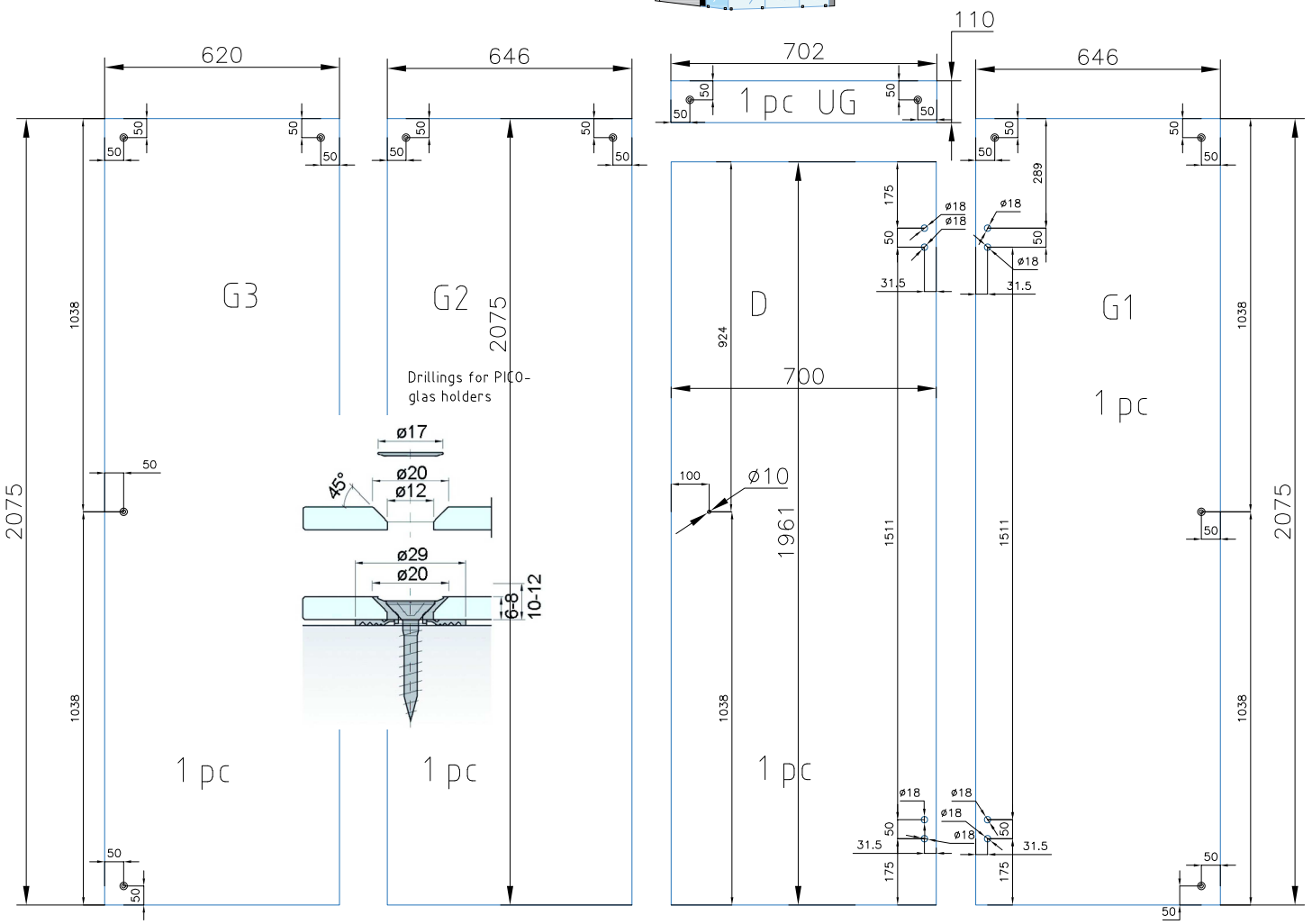

SHBG01L
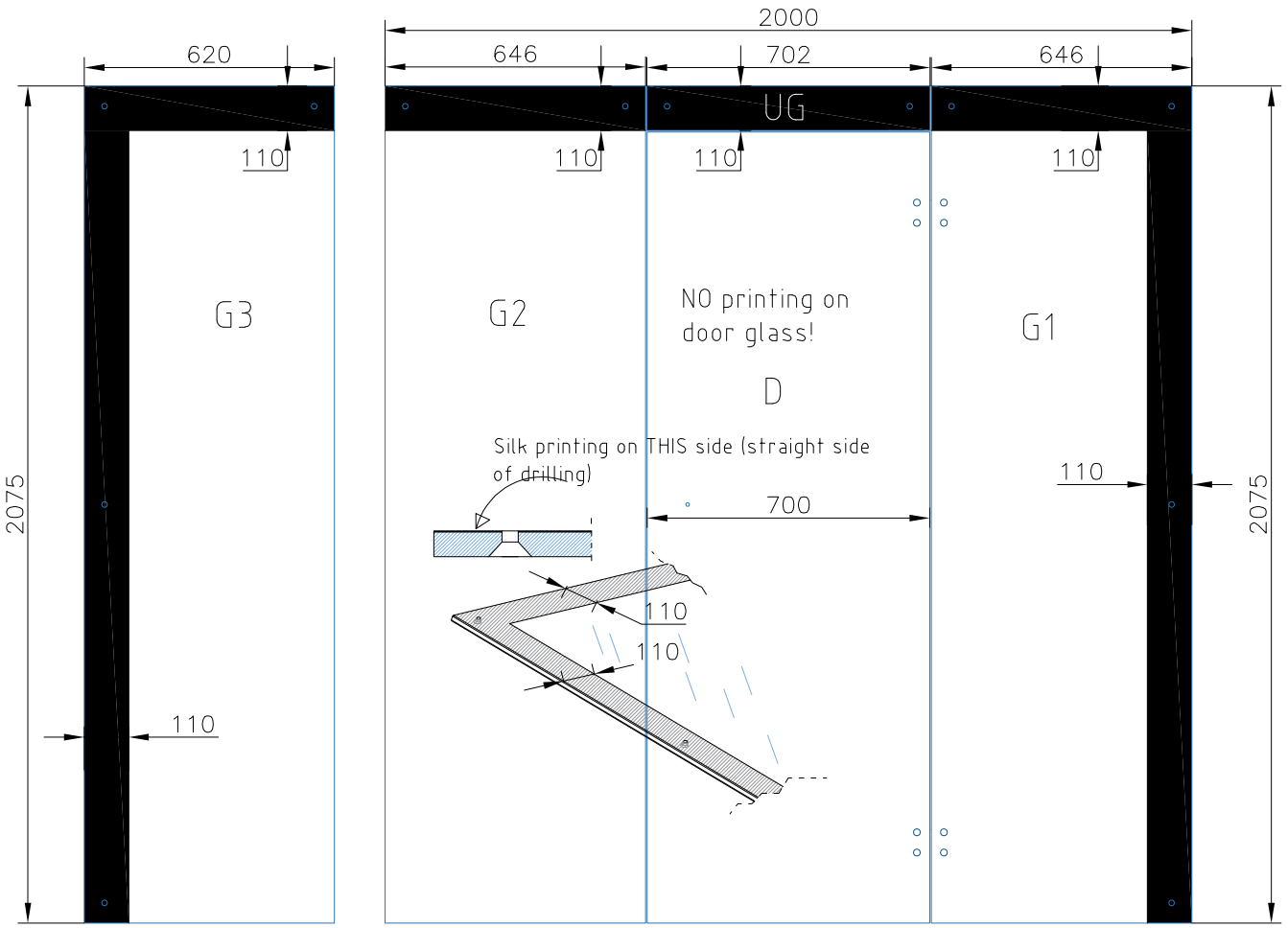
View from FRONT
HARVIA BLOCK-SAUNA GLASSES, BLACK SILK PRINTING on BACK side of glasses (excluding door glass).
Thickness of the glass 8mm, tempered, CLEAR.